TREY DOOR PULL ASSEMBLY INSTRUCTIONS

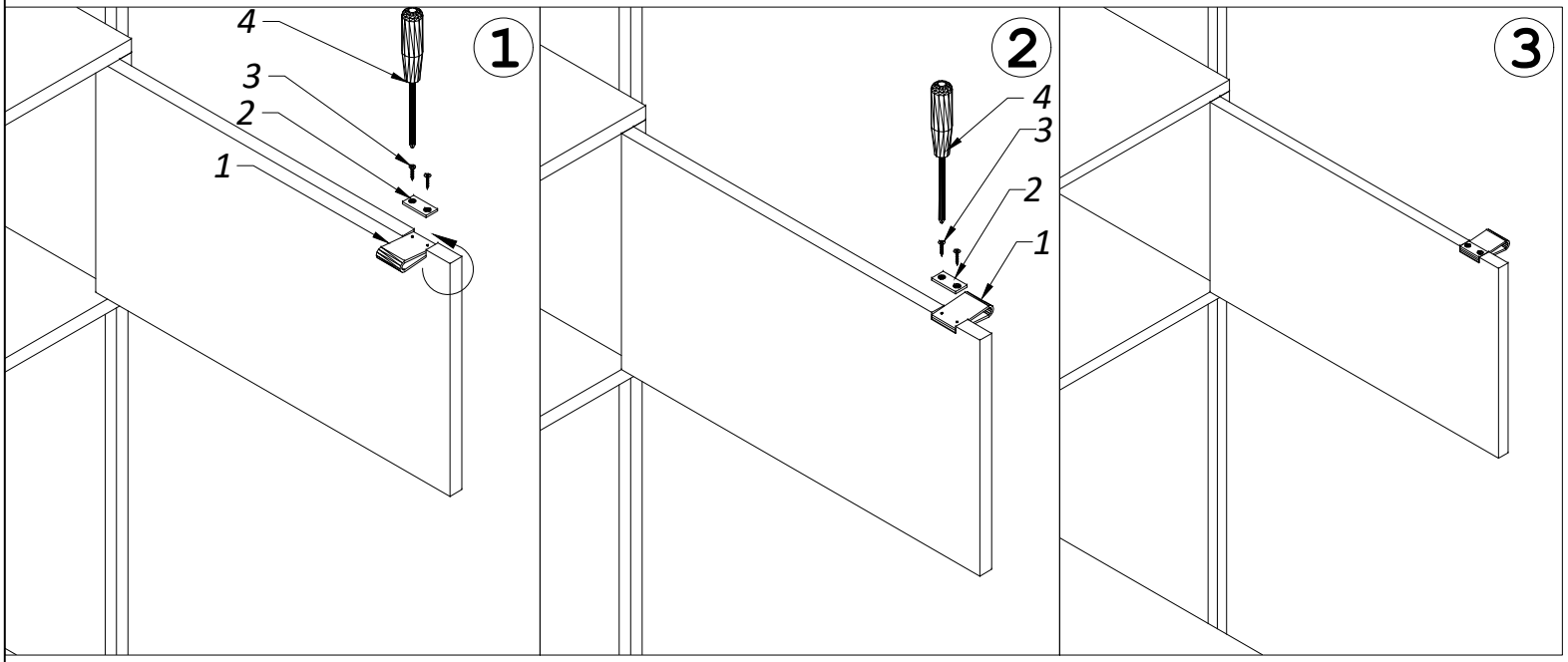

PARTS LIST

#	DESCRIPTION
1	LEATHER PULL
2	IRON PLATE
3	PHILLIPS SCREW 8x1

TOOL REQUIRED

#	DESCRIPTION
4	PHILLIPS SCREW DRIVER NOT INCLUDED

NOTE:
LEATHER PULL IS PRE ASSEMBLED
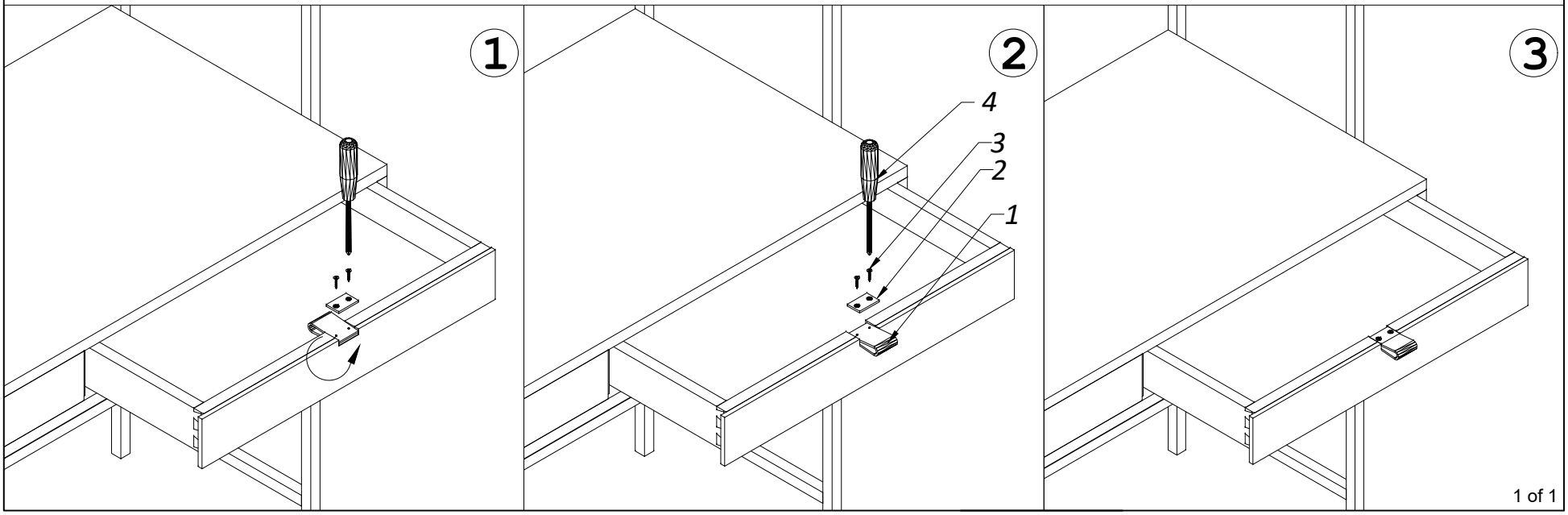
TREY DRAWER PULL ASSEMBLY INSTRUCTIONS